Integrated Secondary Side Bias Regulator for Isolated DC-DC Converters

General Description

The LM34927 regulator features all of the functions needed to implement a low cost, efficient, isolated bias regulator. This high voltage regulator contains two 100V N-Channel MOSFET switches - a high-side buck switch and a low-side synchronous switch. The Constant-on-time (COT) control scheme employed in the LM34927 requires no loop compensation and provides excellent transient response. The regulator operates with an on-time that is inversely proportional to the input voltage. This feature allows the operating frequency to remain relatively constant. An intelligent peak current limit is implemented with integrated sense circuit. Other features include a programmable input under voltage comparator to inhibit operation during low-voltage conditions. Protection features include thermal shutdown and V_{CC} Undervoltage Lockout (UVLO). The LM34927 is offered in LLP-8 and PSOP-8 plastic packages.

Features

- Wide 9V to 100V Input Range
- Integrated 100V, High and Low Side Switches
- No Schottky Required
- Constant On-Time Control
- No Loop Compensation Required
- Ultra-Fast Transient Response
- Nearly Constant Operating Frequency
- Intelligent Peak Current Limit
- Adjustable Output Voltage From 1.225V
- Precision 2% Feedback Reference
- Frequency Adjustable to 1MHz
- Adjustable Undervoltage Lockout (UVLO)
- Remote Shutdown
- Thermal Shutdown

Packages

- LLP-8
- PSOP-8

Applications

- Isolated Telecom Bias Supply
- Isolated Automotive and Industrial Electronics

Typical Application

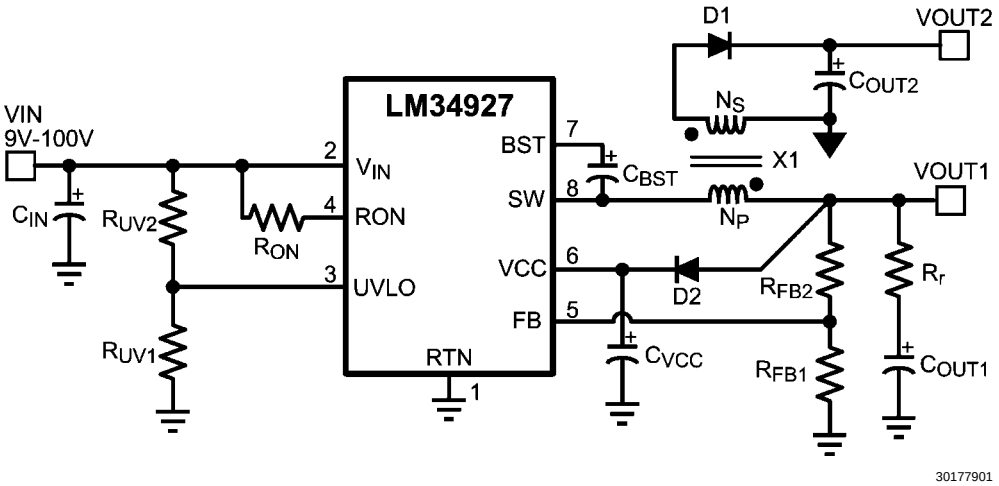

FIGURE 1. Typical Application Schematic

Copyright © 1999-2012, Texas Instruments Incorporated

Connection Diagram

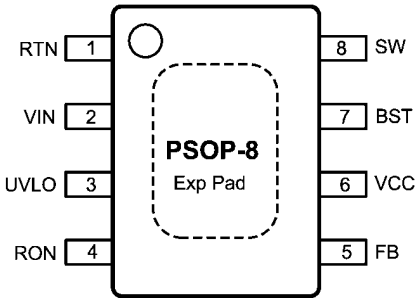

30177902

Top View (Connect Exposed Pad to RTN)

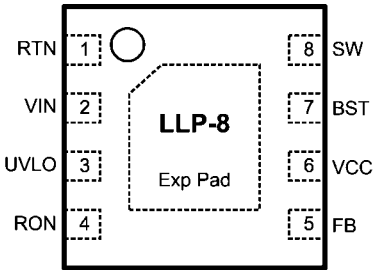

30177903

Top View (Connect Exposed Pad to RTN)

Ordering Information

Order Number	Package Type	Package Drawing	Supplied As
LM34927MR	PSOP-8	MRA08A	1000 Units on Tape and Reel
LM34927SD	LLP-8	SDC08B	1000 Units on Tape and Reel

Pin Descriptions

Pin	Name	Description	Application Information
1	RTN	Ground	Ground connection of the integrated circuit.
2	V_{IN}	Input Voltage	Operating input range is 9V to 100V.
3	UVLO	Input Pin of Undervoltage Comparator	Resistor divider from V_{IN} to UVLO to GND programs the undervoltage detection threshold. An internal current source is enabled when UVLO is above 1.225V to provide hysteresis. When UVLO pin is pulled below 0.66V externally, the parts goes in shutdown mode.
4	R_{ON}	On-Time Control	A resistor between this pin and V_{IN} sets the switch on-time as a function of V_{IN}. Minimum recommended on-time is 100ns at max input voltage.
5	FB	Feedback	This pin is connected to the inverting input of the internal regulation comparator. The regulation level is 1.225V.
6	V_{CC}	Output from the Internal High Voltage Series Pass Regulator. Regulated at 7.6V.	The internal V_{CC} regulator provides bias supply for the gate drivers and other internal circuitry. A 1.0µF decoupling capacitor is recommended.
7	BST	Bootstrap Capacitor	An external capacitor is required between the BST and SW pins (0.01µF ceramic). The BST pin capacitor is charged by the V_{CC} regulator through an internal diode when the SW pin is low.
8	SW	Switching Node	Power switching node. Connect to the output inductor and bootstrap capacitor.
	EP	Exposed Pad	Exposed pad must be connected to RTN pin. Connect to system ground plane on application board for reduced thermal resistance.

Copyright © 1999-2012, Texas Instruments Incorporated

Absolute Maximum Ratings (Note 1)

If Military/Aerospace specified devices are required, please contact the Texas Instruments Sales Office/ Distributors for availability and specifications.

V_{IN}, UVLO to RTN	-0.3V to 100V
SW to RTN	-1.5V to V_{IN} +0.3V
BST to V_{CC}	100V
BST to SW	13V
R_{ON} to RTN	-0.3V to 100V
V_{CC} to RTN	-0.3V to 13V
FB to RTN	-0.3V to 5V
ESD Rating (Human Body Model(Note 5)	2kV
Lead Temperature (Note 2)	200°C
Storage Temperature Range	-55°C to +150°C

Operating Ratings (Note 1)

V_{IN} Voltage	9V to 100V
Operating Junction Temperature	−40°C to +125°C

Electrical Characteristics

Specifications with standard typeface are for T_J = 25°C, and those with **boldface** type apply over full Operating Junction Temperature range. V_{IN} = 48V, unless otherwise stated. See (Note 3).

Symbol	Parameter	Conditions	Min	Typ	Max	Units
V_{CC} Supply						
V_{CC} Reg	V_{CC} Regulator Output	V_{IN} = 48V, I_{CC} = 20mA	**6.25**	7.6	**8.55**	V
	V_{CC} Current Limit	V_{IN} = 48V(Note 4)	**26**			mA
	V_{CC} UVLO Threshold (V_{CC} increasing)		**4.15**	4.5	**4.9**	V
	V_{CC} UVLO Hysteresis			300		mV
	V_{CC} Drop Out Voltage	V_{IN} = 8V, I_{CC} = 20mA		2.3		V
	I_{IN} Operating Current	Non-Switching, FB = 3V		1.75		mA
	I_{IN} Shutdown Current	UVLO = 0V		50	**225**	µA
Under-Voltage Sensing Function						
	UV Threshold	UV Rising	**1.19**	1.225	**1.26**	V
	UV Hysteresis Input Current	UV = 2.5V	**-10**	-20	**-29**	µA
	Remote Shutdown Threshold	Voltage at UVLO Falling	**0.32**	0.66		V
	Remote Shutdown Hysteresis			110		mV
Regulation and Over-Voltage Comparators						
	FB Regulation Level	Internal Reference Trip Point for Switch ON	**1.2**	1.225	**1.25**	V
	FB Overvoltage Threshold	Trip Point for Switch OFF		1.62		V
	FB Bias Current			60		nA
Switch Characteristics						
	Buck Switch $R_{DS(ON)}$	I_{TEST} = 200mA, BST-SW = 7V		0.8	**1.8**	Ω
	Synchronous $R_{DS(ON)}$	I_{TEST} = 200mA		0.45	**1**	Ω
	Gate Drive UVLO	V_{BST} − V_{SW} Rising	**2.4**	3	**3.6**	V
	Gate Drive UVLO Hysteresis			260		mV
Minimum Off-Time						
	Minimum Off-Timer	FB = 0V		144		ns
On Time Generator						
	T_{ON} Test 1	V_{IN} = 32V, R_{ON} = 100k	**270**	350	**460**	ns

Copyright © 1999-2012, Texas Instruments Incorporated

Symbol	Parameter	Conditions	Min	Typ	Max	Units
	T_{ON} Test 2	V_{IN} = 48V, R_{ON} = 100k	**188**	250	**336**	ns
	T_{ON} Test 3	V_{IN} = 75V, R_{ON} = 250k	**250**	370	**500**	ns
	T_{ON} Test 4	V_{IN} = 10V, R_{ON} = 250k	**1880**	3200	**4425**	ns
Current Limit						
	Current Limit Threshold		**0.7**	1.02	**1.3**	A
	Current Limit Response Time	Time to Switch Off		150		ns
	OFF-Time Generator (Test 1)	FB = 0.1V, V_{IN} = 48V		12		µs
	OFF-Time Generator (Test 2)	FB = 1.0V, V_{IN} = 48V		2.5		µs
Thermal Shutdown						
Tsd	Thermal Shutdown Temp.			165		°C
	Thermal Shutdown Hysteresis			20		°C
Thermal Resistance						
θ_{JA}	Junction to Ambient	PSOP-8		40		°C/W
		LLP-8		40		°C/W

Note 1: Absolute Maximum Ratings are limits beyond which damage to the device may occur. Operating Ratings are conditions under which operation of the device is intended to be functional. For guaranteed specifications and test conditions, see the Electrical Characteristics. The RTN pin is the GND reference electrically connected to the substrate.

Note 2: For detailed information on soldering plastic PSOP package, refer to the Packaging Data Book available from National Semiconductor Corporation. Max solder time not to exceed 4 seconds.

Note 3: All limits are guaranteed by design. All electrical characteristics having room temperature limits are tested during production at T_A = 25°C. All hot and cold limits are guaranteed by correlating the electrical characteristics to process and temperature variations and applying statistical process control.

Note 4: V_{CC} provides self bias for the internal gate drive and control circuits. Device thermal limitations limit external loading.

Note 5: The human body model is a 100pF capacitor discharged through a 1.5kΩ resistor into each pin.

Copyright © 1999-2012, Texas Instruments Incorporated

Typical Performance Characteristics

Efficiency at 750kHz, V_{OUT1} = 10V

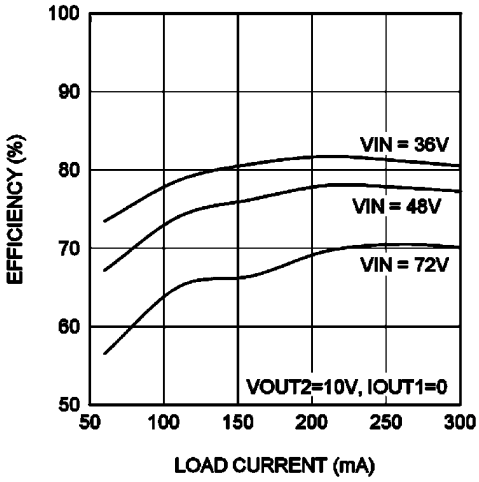

30177904

V_{CC} vs V_{IN}

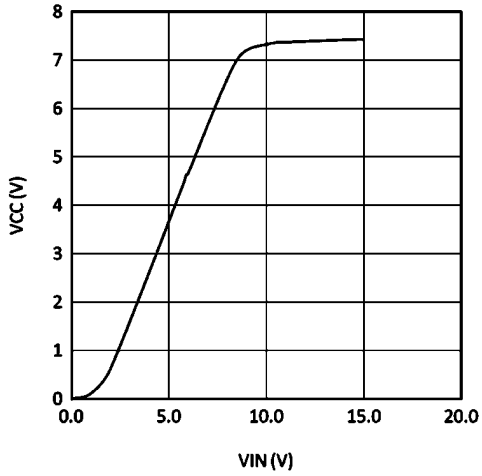

30177905

V_{CC} vs I_{CC}

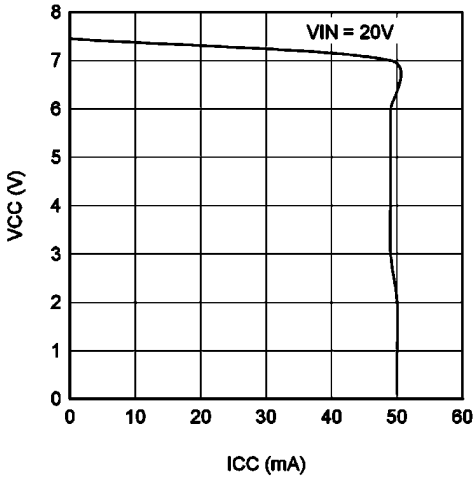

30177906

I_{CC} vs External V_{CC}

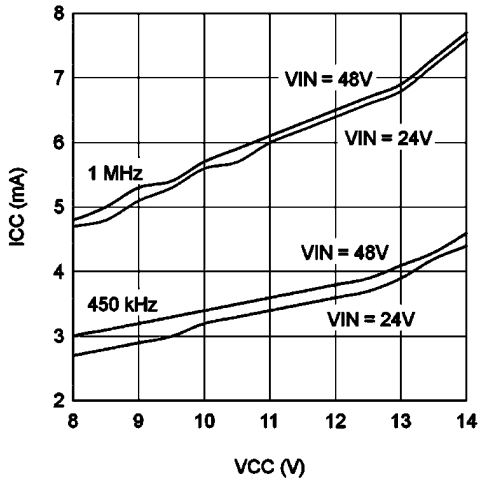

30177907

T_{ON} vs V_{IN} and R_{ON}

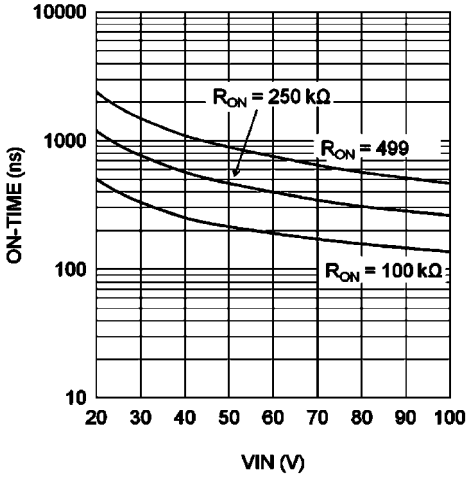

30177908

T_{OFF} (I_{LIM}) vs V_{FB} and V_{IN}

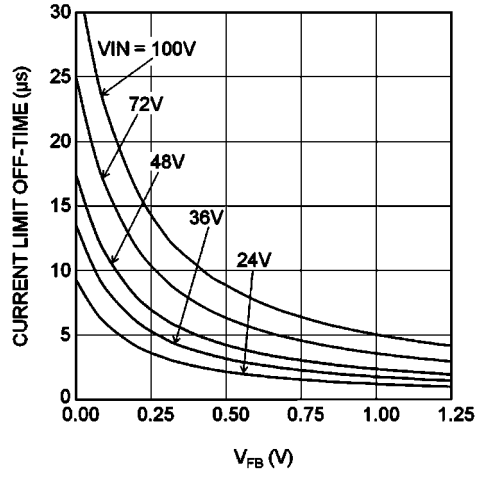

30177909

Copyright © 1999-2012, Texas Instruments Incorporated

I_{IN} vs V_{IN} (Operating, Non Switching)

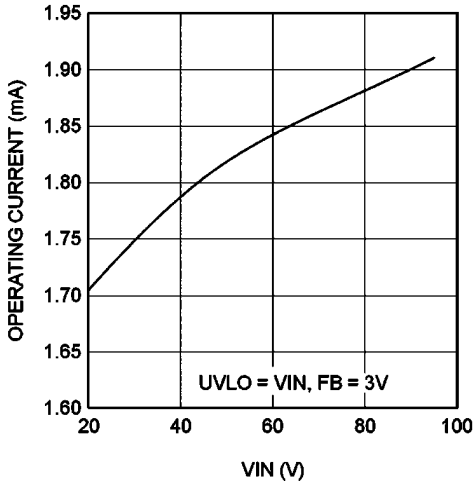

30177910

I_{IN} vs V_{IN} (Shutdown)

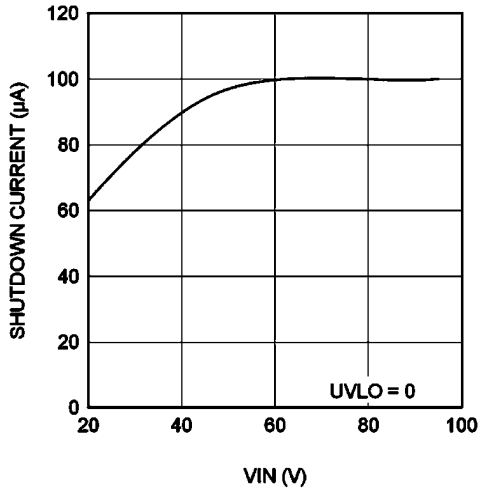

30177911

Copyright © 1999-2012, Texas Instruments Incorporated

Block Diagram

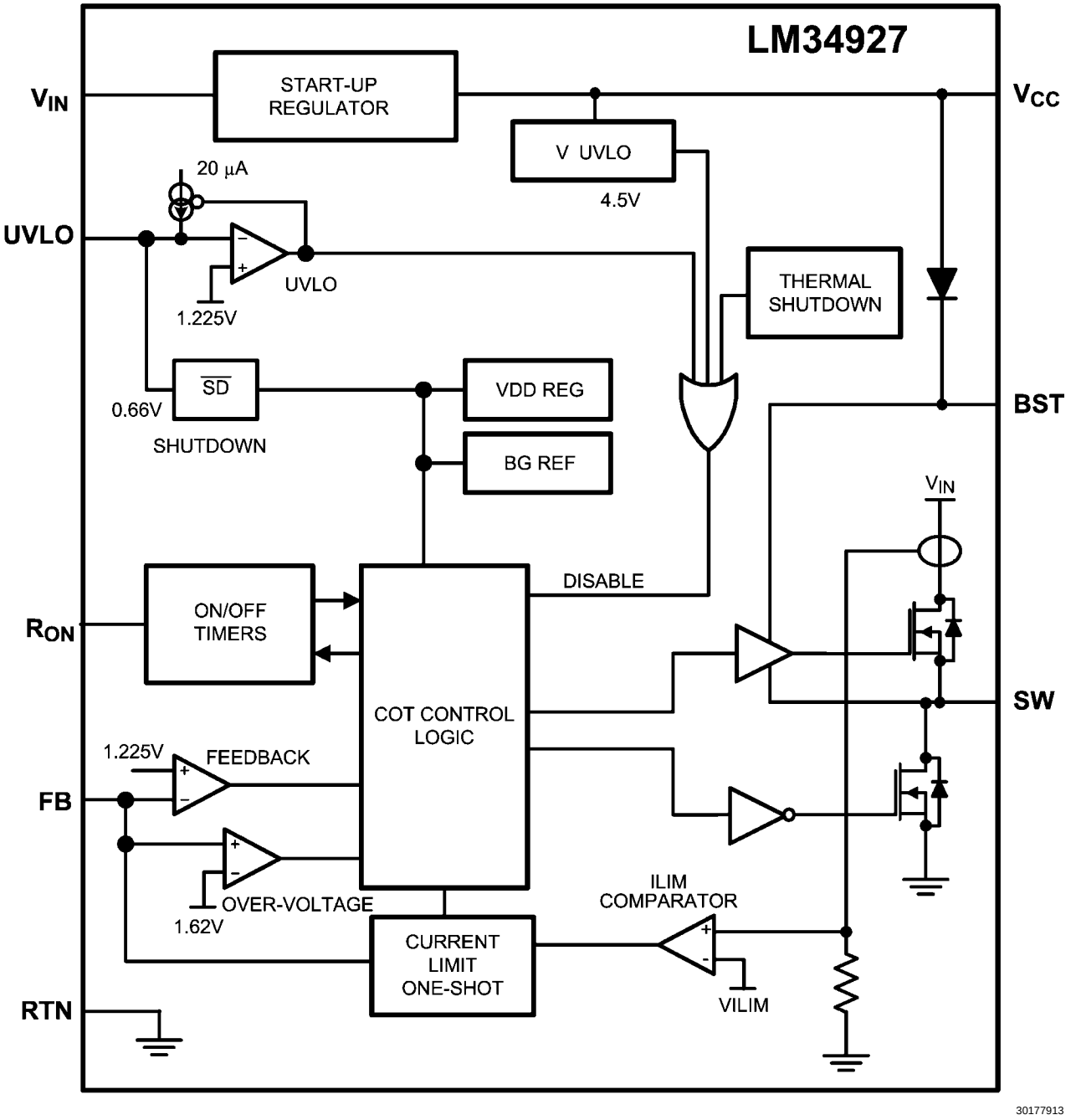

FIGURE 2. Functional Block Diagram

Copyright © 1999-2012, Texas Instruments Incorporated

Functional Description

The LM34927 step-down switching regulator features all the functions needed to implement a low cost, efficient, isolated bias supply. This high voltage regulator contains 100V, N-channel buck and synchronous switches, is easy to implement, and is provided in thermally enhanced PSOP-8 and LLP-8 packages. The regulator operation is based on a constant on-time control scheme using an on-time inversely proportional to V_{IN}. This control scheme does not require loop compensation. Current limit is implemented with forced off-time inversely proportional to V_{OUT}. This scheme ensures short circuit protection while providing minimum foldback. The simplified block diagram of the LM34927 is shown in *Figure 2*.

The LM34927 can be applied in numerous applications to efficiently regulate down higher voltages. This regulator is well suited for 48V telecom and 42V automotive power bus ranges. Protection features include: thermal shutdown, Undervoltage Lockout, minimum forced off-time, and an intelligent current limit.

Control Overview

The LM34927 regulator employs a control principle based on a comparator and a one-shot on-timer, with the output voltage feedback (FB) compared to an internal reference (1.225V). If the FB voltage is below the reference the internal buck switch is switched on for the one-shot timer period, which is a function of the input voltage and the programming resistor (RT). Following the on-time the switch remains off until the FB voltage falls below the reference, and the forced minimum off-time has expired. When the FB pin voltage falls below the reference and the off-time one-shot period expires, the buck switch is then turned on for another on-time one-shot period. This will continue until regulation is achieved and the FB voltage is approximately equal to 1.225V (typ).

In a synchronous buck converter, the low side (sync) FET is ‘on’ when the high side (buck) FET is ‘off’. The inductor current ramps up when the high side switch is ‘on’ and ramps down when the high side switch is ‘off’. There is no diode emulation feature in this IC, and therefore, the inductor current may ramp in the negative direction at light load. This causes the converter to operate in continuous conduction mode (CCM) regardless of the output loading. The operating frequency remains relatively constant with load and line variations. The operating frequency can be calculated as follows:

$$f\text{sw} = \frac{V_{OUT}}{10^{-10} \times R_{ON}}$$

The output voltage (V_{OUT}) is set by two external resistors (R_{FB1}, R_{FB2}). The regulated output voltage is calculated as follows:

$$V_{OUT} = 1.225V \times \frac{R_{FB2} + R_{FB1}}{R_{FB1}}$$

$$\frac{R_{FB2}}{R_{FB1}} = \frac{V_{OUT} - 1.225V}{1.225V}$$

This regulator regulates the output voltage based on ripple voltage at the feedback input, requiring a minimum amount of ESR for the output capacitor (C_{OUT}). A minimum of 25mV of ripple voltage at the feedback pin (FB) is required for the LM34927. In cases where the capacitor ESR is too small, additional series resistance may be required (R_C in *Figure 3* Low Ripple Output Configuration).

For applications where lower output voltage ripple is required the output can be taken directly from a low ESR output capacitor, as shown in *Figure 3* Low Ripple Output Configuration. However, R_C slightly degrades the load regulation.

V_{CC} Regulator

The LM34927 contains an internal high voltage linear regulator with a nominal output of 7.6V. The input pin (V_{IN}) can be connected directly to the line voltages up to 100V. The V_{CC} regulator is internally current limited to 30mA. The regulator sources current into the external capacitor at V_{CC}. This regulator supplies current to internal circuit blocks including the synchronous MOSFET driver and the logic circuits. When the voltage on the V_{CC} pin reaches the Undervoltage Lockout threshold of 4.5V, the IC is enabled.

Copyright © 1999-2012, Texas Instruments Incorporated

The V_{CC} regulator contains an internal diode connection to the BST pin to replenish the charge in the gate drive boot capacitor when SW pin is low.

At high input voltages, the power dissipated in the high voltage regulator is significant and can limit the overall achievable output power. As an example, with the input at 48V and switching at high frequency, the V_{CC} regulator may supply up to 7mA of current resulting in 48V x 7mA = 336mW of power dissipation. If the V_{CC} voltage is driven externally by an alternate voltage source, between 8V and 14V, the internal regulator is disabled. This reduces the power dissipation in the IC.

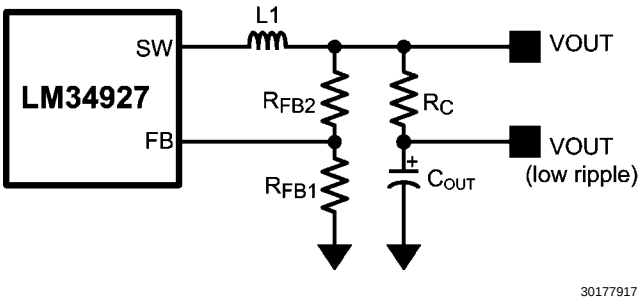

FIGURE 3. Low Ripple Output Configuration

Regulation Comparator

The feedback voltage at FB is compared to an internal 1.225V reference. In normal operation, when the output voltage is in regulation, an on-time period is initiated when the voltage at FB falls below 1.225V. The high side switch will stay on for the on-time, causing the FB voltage to rise above 1.225V. After the on-time period, the high side switch will stay off until the FB voltage again falls below 1.225V. During start-up, the FB voltage will be below 1.225V at the end of each on-time causing the high side switch to turn on immediately after the minimum forced off-time of 144ns. The high side switch can be turned off before the on-time is over, if peak current in the inductor reaches the current limit threshold.

Overvoltage Comparator

The feedback voltage at FB is compared to an internal 1.62V reference. If the voltage at FB rises above 1.62V the on-time pulse is immediately terminated. This condition can occur if the input voltage and/or the output load changes suddenly. The high side switch will not turn on again until the voltage at FB falls below 1.225V.

On-Time Generator

The on-time for the LM34927 is determined by the R_{ON} resistor, and is inversely proportional to the input voltage (V_{IN}), resulting in a nearly constant frequency as V_{IN} is varied over its range. The on-time equation for the LM34927 is:

$$T_{ON} = \frac{10^{-10} \times R_{ON}}{V_{IN}}$$

See *Figure 4* below. R_{ON} should be selected for a minimum on-time (at maximum V_{IN}) greater than 100ns, for proper operation. This requirement limits the maximum frequency for each application.

Copyright © 1999-2012, Texas Instruments Incorporated

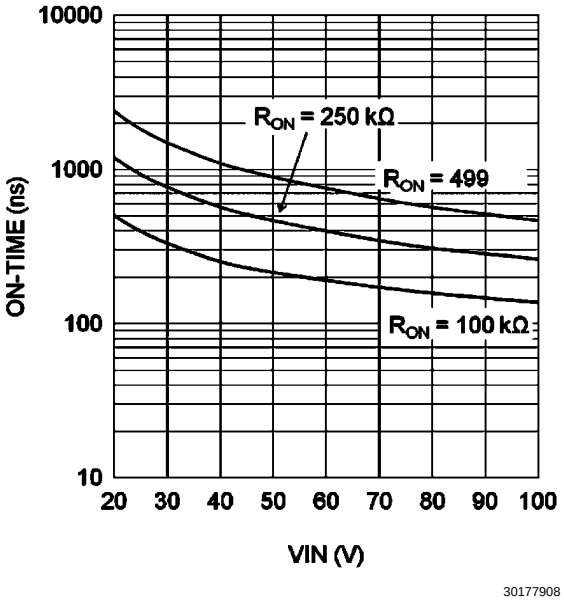

FIGURE 4. T_{ON} vs V_{IN} and R_{ON}

Current Limit

The LM34927 contains an intelligent current limit off-timer. If the current in the buck switch exceeds 1.02A the present cycle is immediately terminated, and a non-resetable off-timer is initiated. The length of off-time is controlled by the FB voltage and the input voltage V_{IN}. As an example, when FB = 0V and V_{IN} = 48V, a maximum off-time is set to 16µs. This condition occurs when the output is shorted, and during the initial part of start-up. This amount of time ensures safe short circuit operation even up to the maximum input voltage of 100V.

In cases of overload where the FB voltage is above zero volts (not a short circuit) the current limit off-time is reduced. Reducing the off-time during less severe overloads reduces the amount of foldback, recovery time, and start-up time. The off-time is calculated from the following equation:

$$T_{OFF(ILIM)} = \frac{0.07 \times V_{IN}}{V_{FB} + 0.2V} \ \mu s$$

The current limit protection feature is peak limited, the maximum average output will be less than the peak.

N-Channel Buck Switch and Driver

The LM34927 integrates an N-Channel Buck switch and associated floating high voltage gate driver. The gate driver circuit works in conjunction with an external bootstrap capacitor and an internal high voltage diode. A 0.01uF ceramic capacitor connected between the BST pin and SW pin provides the voltage to the driver during the on-time. During each off-time, the SW pin is at approximately 0V, and the bootstrap capacitor charges from V_{CC} through the internal diode. The minimum off-timer, set to 144ns, ensures a minimum time each cycle to recharge the bootstrap capacitor.

Synchronous Rectifier

The LM34927 provides an internal synchronous N-Channel MOSFET rectifier. This MOSFET provides a path for the inductor current to flow when the high-side MOSFET is turned off.

The synchronous rectifier has no diode emulation mode, and is designed to keep the regulator in continuous conduction mode even during light loads which would otherwise result in discontinuous operation. This feature specifically allows the user to design a secondary regulator using a transformer winding off the main inductor to generate the alternate regulated output voltage.

Under Voltage Detector

The LM34927 contains a dual level Undervoltage Lockout (UVLO) circuit. When the UVLO pin voltage is below 0.66V, the controller is in a low current shutdown mode. When the UVLO pin voltage is greater than 0.66V but less than 1.225V, the controller is in standby mode. In standby mode the V_{CC} bias regulator is active while the regulator output is disabled. When the V_{CC} pin exceeds the V_{CC} undervoltage thresholds and the UVLO pin voltage is greater than 1.225V, normal operation begins. An external set-point voltage divider from V_{IN} to GND can be used to set the minimum operating voltage of the regulator.

Copyright © 1999-2012, Texas Instruments Incorporated

UVLO hysteresis is accomplished with an internal 20µA current source that is switched on or off into the impedance of the set-point divider. When the UVLO threshold is exceeded, the current source is activated to quickly raise the voltage at the UVLO pin. The hysteresis is equal to the value of this current times the resistance R_{UV2}.

UVLO	V_{CC}	Mode	Description
<0.66V		Shutdown	V_{CC} regulator disabled. Switcher disabled.
0.66V – 1.225V		Standby	V_{CC} regulator enabled. Switcher disabled.
>1.225V	V_{CC} < 4.5V	Standby	V_{CC} regulator enabled. Switcher disabled.
	V_{CC} > 4.5V	Operating	V_{CC} enabled. Switcher enabled.

If the UVLO pin is wired directly to the V_{IN} pin, the regulator will begin operation once the V_{CC} undervoltage is satisfied.

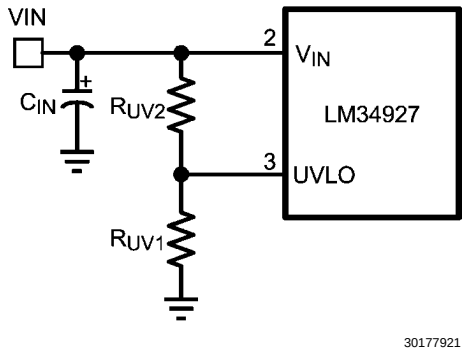

FIGURE 5. UVLO Resistor Setting

Thermal Protection

The LM34927 should be operated so the junction temperature does not exceed 150°C during normal operation. An internal Thermal Shutdown circuit is provided to protect the LM34927 in the event of a higher than normal junction temperature. When activated, typically at 165°C, the controller is forced into a low power reset state, disabling the buck switch and the V_{CC} regulator. This feature prevents catastrophic failures from accidental device overheating. When the junction temperature reduces below 145°C (typical hysteresis = 20°C), the V_{CC} regulator is enabled, and normal operation is resumed.

Copyright © 1999-2012, Texas Instruments Incorporated

Application Information

TYPICAL ISOLATED BIAS APPLICATION SCHEMATIC

A typical isolated bias supply application is shown in *Figure 6* below. Inductor (L) in a typical buck circuit is replaced with a coupled inductor (X1). A diode (D1) is used to rectify the voltage on the secondary output. The nominal voltage at the secondary output (V_{OUT2}) is given by:

$$V_{OUT2} = V_{OUT1} \times \frac{N_S}{N_P} - V_F$$

where VF is the forward voltage drop of D1, and NP, NS are the number of turns on the primary and secondary of coupled inductor X1. For output voltage (V_{OUT1}) above the maximum V_{CC} (8.3V), the V_{CC} pin can be diode connected to V_{OUT1} for higher efficiency and low dissipation in the IC.

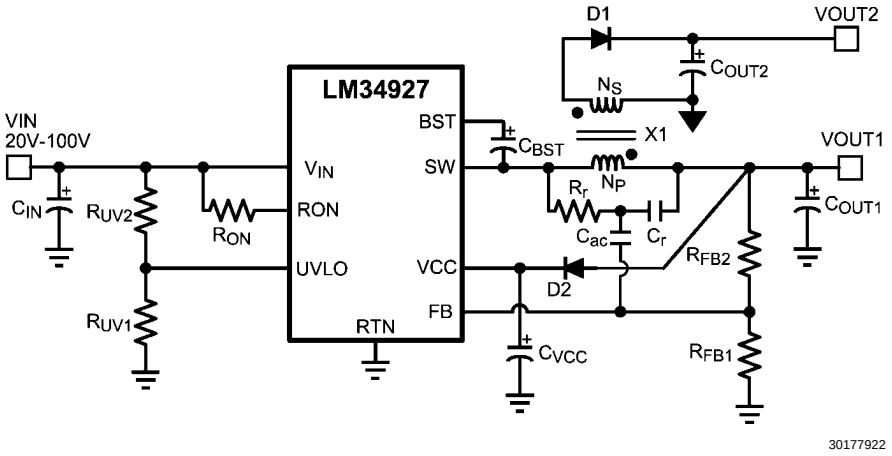

FIGURE 6. Typical Isolated Application Schematic

3W ISOLATED BIAS APPLICATION SCHEMATIC

A complete 3W bias supply for isolated bias supply application is shown in *Figure 7* below.

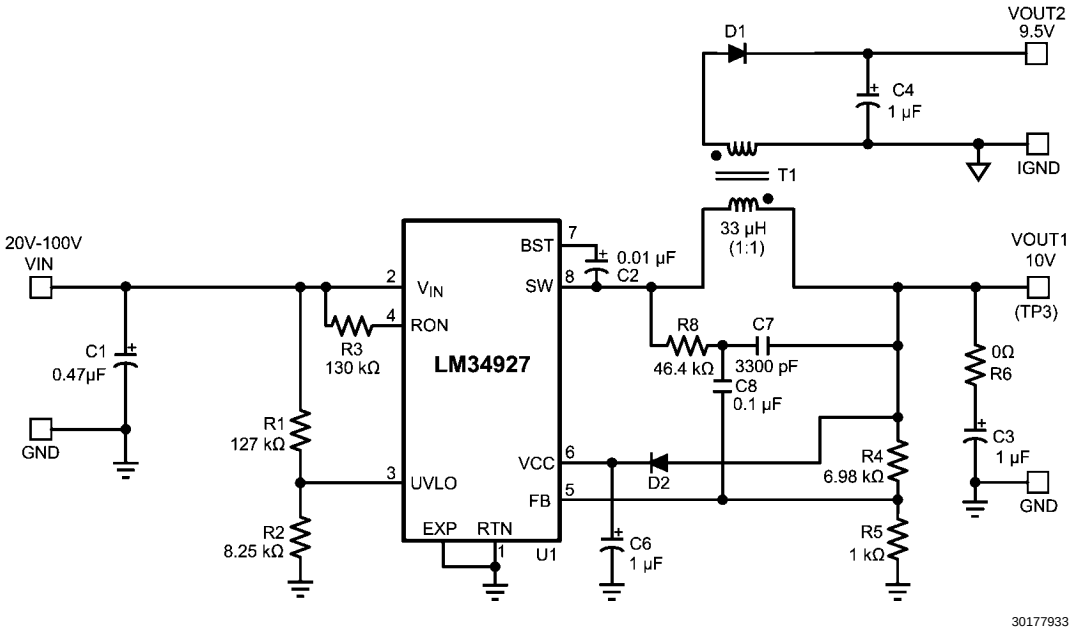

FIGURE 7. A 3W Isolated Application Schematic

Copyright © 1999-2012, Texas Instruments Incorporated

LOWEST PART COUNT ISOLATED APPLICATION SCHEMATIC

A low part count schematic for isolated bias application is shown in *Figure 8* below. The primary should not be loaded in this configuration. If primary loading is required a diode will be required between V_{OUT} primary and V_{CC}.

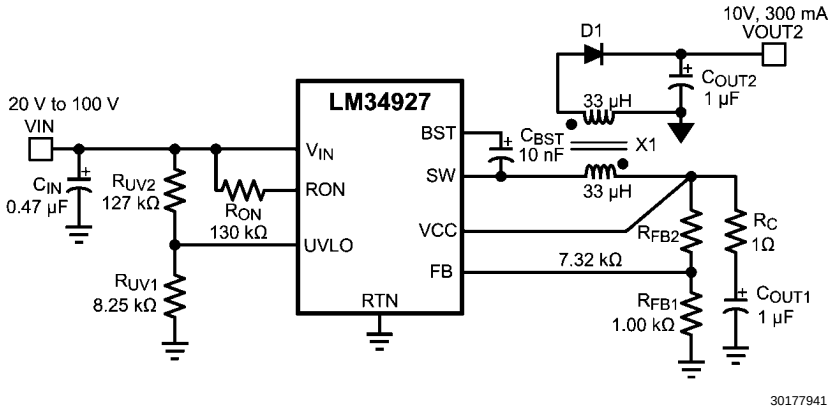

FIGURE 8. Lowest Part Count Isolated Application Schematic

RIPPLE CONFIGURATION

LM34927 uses Constant-On-Time (COT) control scheme, in which the on-time is terminated by an on-timer, and the off-time is terminated by the feedback voltage (V_{FB}) falling below the reference voltage (V_{REF}). Therefore, for stable operation, the feedback voltage must decrease monotonically, in phase with the inductor current during the off-time. Furthermore this change in feedback voltage (ΔV_{FB}) during off-time must be large enough to suppress any noise component present at the feedback node.

Table 1 shows three different methods for generating appropriate voltage ripple at the feedback node. Type 1 and Type 2 ripple circuits couple the ripple at the output of the converter to the feedback node (FB). The output voltage ripple has two components:

1. Capacitive ripple caused by the inductor current ripple charging/discharging the output capacitor.
2. Resistive ripple caused by the inductor current ripple flowing through the ESR of the output capacitor.

The capacitive ripple is not in phase with the inductor current. As a result of this, the capacitive ripple does not decrease monotonically during the off-time. The resistive ripple is in phase with the inductor current and decreases monotonically during off-time. The resistive ripple must exceed the capacitive ripple at the output node (V_{OUT}) for stable operation. If this condition is not satisfied, unstable switching behavior is observed in COT converters, with multiple on-time bursts in close succession followed by a long off-time.

Type 3 ripple method uses R_r and C_r and the switch node (SW) voltage to generate a triangular ramp. This triangular ramp is ac coupled using C_{ac} to the feedback node (FB). Since this circuit does not use the output voltage ripple, it is ideally suited for applications where low output voltage ripple is required. See application note AN-1481 for more details for each ripple generation method.

TABLE 1.

Type 1 Lowest Cost Configuration	Type 2 Reduced Ripple Configuration	Type 3 Minimum Ripple Configuration
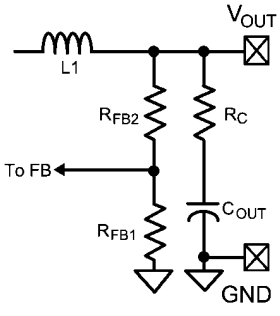	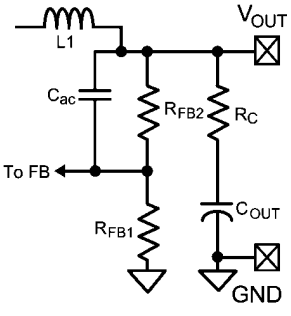	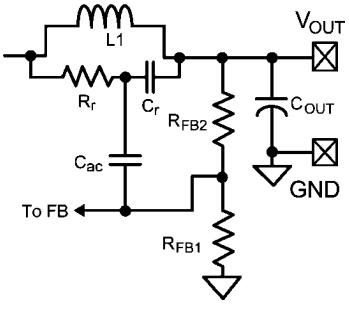
$R_C \geq \frac{25\ mV}{\Delta I_{L(MIN)}} \times \frac{V_{OUT}}{V_{REF}}$	$C \geq \frac{5}{f_{sw}(R_{FB2} \| R_{FB1})}$ $R_C \geq \frac{25\ mV}{\Delta I_{L(MIN)}}$	$C_r = 3300\ pF$ $C_{ac} = 100\ nF$ $R_r C_r \leq \frac{(V_{IN(MIN)} - V_{OUT}) \times T_{ON}}{25\ mV}$

Copyright © 1999-2012, Texas Instruments Incorporated

Soft Start

A soft-start feature can be implemented to the LM34927 using an external circuit. As shown in *Figure 9*, the soft-start circuit consists of one capacitor, C_1, two resistors, R_1 and R_2, and a diode, D. During the initial start-up, the VCC voltage is established prior to the V_{OUT} voltage. D is thereby forward biased and the FB voltage is pulled up above the reference voltage (1.225V). The switcher is disabled. With the charging of the capacitor C_1, the voltage at node B gradually decreases. Due to the action of the control circuit, V_{OUT} will gradually rise to maintain the FB voltage at the reference voltage. Once the voltage at node B is lower than the FB voltage, plus the voltage drop of D, the soft-start is finished and D is reverse biased.

During the initial part of the start-up, the FB voltage can be approximated as follows. Please note that the effect of R_1 has been ignored to simplify the calculation:

$$V_{FB} = (VCC - V_D) \times \frac{R_{FB1} \times R_{FB2}}{R_2 \times (R_{FB1} + R_{FB2}) + R_{FB1} \times R_{FB2}}$$

To achieve the desired soft-start, the following design guidance is recommended:

(1) R_2 is selected so that V_{FB} is higher than 1.225V for a V_{CC} of 4.5V, but is lower than 5V when V_{CC} is 8.55V. If an external V_{CC} is used, V_{FB} should not exceed 5V at maximum V_{CC}.

(2) C_1 is selected to achieve the desired start-up time that can be determined as follows:

$$t_S = C_1 \times (R_2 + \frac{R_{FB1} \times R_{FB2}}{R_{FB1} + R_{FB2}})$$

(3) R_1 is used to maintain the node B voltage at zero after the soft-start is finished. A value larger than the feedback resistor divider is preferred.

Based on the schematic shown in *Figure 7*, selecting C_1=1uF, R_2=1kΩ, R_1=30kΩ results in a soft-start time of about 2ms.

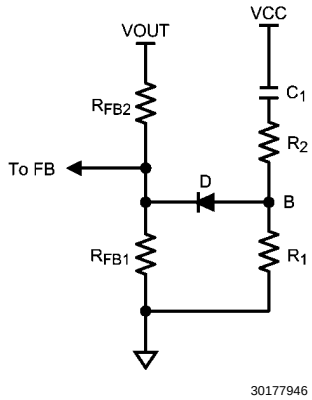

FIGURE 9. Soft-Start Circuit

Copyright © 1999-2012, Texas Instruments Incorporated

Layout Recommendation

A proper layout is essential for optimum performance of the circuit. In particular, the following guidelines should be observed:

1. C_{IN}: The loop consisting of input capacitor (C_{IN}), V_{IN} pin, and RTN pin carries switching currents. Therefore the input capacitor should be placed close to the IC, directly across V_{IN} and RTN pins and the connections to these two pins should be direct to minimize the loop area. In general it is not possible to accommodate all of input capacitance near the IC. A good practice is to use a 0.1µF or 0.47µF capacitor directly across the V_{IN} and RTN pins close to the IC, and the remaining bulk capacitor as close as possible (Refer to *Figure 10* Placement of Bypass Capacitors).
2. C_{VCC} and C_{BST}: The V_{CC} and bootstrap (BST) bypass capacitors supply switching currents to the high and low side gate drivers. These two capacitors should also be placed as close to the IC as possible, and the connecting trace lengths and loop area should be minimized (See *Figure 10* Placement of Bypass Capacitors).
3. The Feedback trace carries the output voltage information and a small ripple component that is necessary for proper operation of LM34927. Therefore care should be taken while routing the feedback trace so avoid coupling any noise to this pin. In particular, feedback trace should not run close to magnetic components, or parallel to any other switching trace.
4. SW trace: SW node switches rapidly between V_{IN} and GND every cycle and is therefore a possible source of noise. SW node area should be minimized. In particular SW node should not be inadvertently connected to a copper plane or pour.

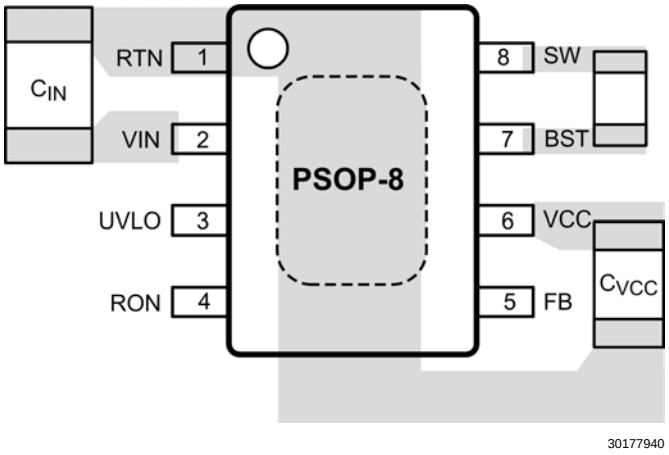

FIGURE 10. Placement of Bypass Capacitors

Copyright © 1999-2012, Texas Instruments Incorporated

Physical Dimensions inches (millimeters) unless otherwise noted

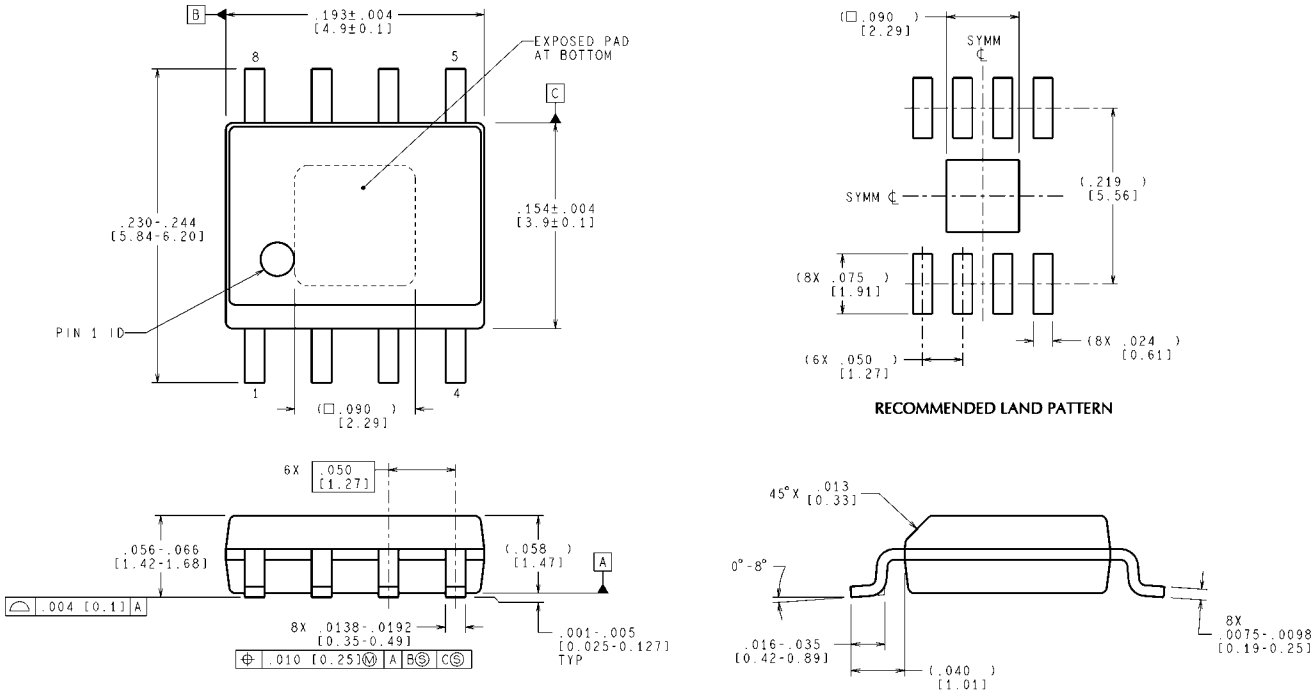

PSOP–8 Outline Drawing
NS Package Number MRA08A

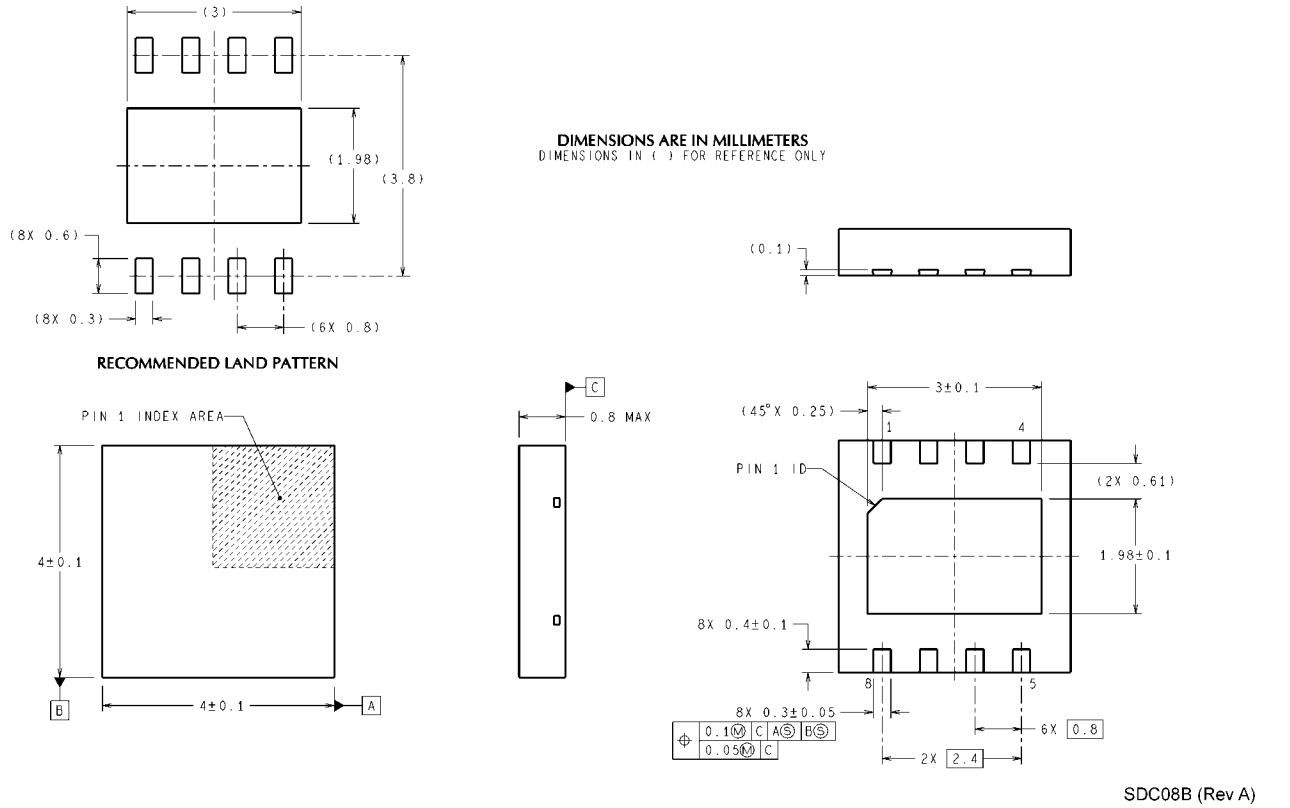

LLP-8 Outline Drawing (Dimensions in mm)
NS Package Number SDC08B

Copyright © 1999-2012, Texas Instruments Incorporated

Notes

Copyright © 1999-2012, Texas Instruments Incorporated

IMPORTANT NOTICE

Texas Instruments Incorporated and its subsidiaries (TI) reserve the right to make corrections, enhancements, improvements and other changes to its semiconductor products and services per JESD46, latest issue, and to discontinue any product or service per JESD48, latest issue. Buyers should obtain the latest relevant information before placing orders and should verify that such information is current and complete. All semiconductor products (also referred to herein as “components”) are sold subject to TI’s terms and conditions of sale supplied at the time of order acknowledgment.

TI warrants performance of its components to the specifications applicable at the time of sale, in accordance with the warranty in TI’s terms and conditions of sale of semiconductor products. Testing and other quality control techniques are used to the extent TI deems necessary to support this warranty. Except where mandated by applicable law, testing of all parameters of each component is not necessarily performed.

TI assumes no liability for applications assistance or the design of Buyers’ products. Buyers are responsible for their products and applications using TI components. To minimize the risks associated with Buyers’ products and applications, Buyers should provide adequate design and operating safeguards.

TI does not warrant or represent that any license, either express or implied, is granted under any patent right, copyright, mask work right, or other intellectual property right relating to any combination, machine, or process in which TI components or services are used. Information published by TI regarding third-party products or services does not constitute a license to use such products or services or a warranty or endorsement thereof. Use of such information may require a license from a third party under the patents or other intellectual property of the third party, or a license from TI under the patents or other intellectual property of TI.

Reproduction of significant portions of TI information in TI data books or data sheets is permissible only if reproduction is without alteration and is accompanied by all associated warranties, conditions, limitations, and notices. TI is not responsible or liable for such altered documentation. Information of third parties may be subject to additional restrictions.

Resale of TI components or services with statements different from or beyond the parameters stated by TI for that component or service voids all express and any implied warranties for the associated TI component or service and is an unfair and deceptive business practice. TI is not responsible or liable for any such statements.

Buyer acknowledges and agrees that it is solely responsible for compliance with all legal, regulatory and safety-related requirements concerning its products, and any use of TI components in its applications, notwithstanding any applications-related information or support that may be provided by TI. Buyer represents and agrees that it has all the necessary expertise to create and implement safeguards which anticipate dangerous consequences of failures, monitor failures and their consequences, lessen the likelihood of failures that might cause harm and take appropriate remedial actions. Buyer will fully indemnify TI and its representatives against any damages arising out of the use of any TI components in safety-critical applications.

In some cases, TI components may be promoted specifically to facilitate safety-related applications. With such components, TI’s goal is to help enable customers to design and create their own end-product solutions that meet applicable functional safety standards and requirements. Nonetheless, such components are subject to these terms.

No TI components are authorized for use in FDA Class III (or similar life-critical medical equipment) unless authorized officers of the parties have executed a special agreement specifically governing such use.

Only those TI components which TI has specifically designated as military grade or “enhanced plastic” are designed and intended for use in military/aerospace applications or environments. Buyer acknowledges and agrees that any military or aerospace use of TI components which have ***not*** been so designated is solely at the Buyer's risk, and that Buyer is solely responsible for compliance with all legal and regulatory requirements in connection with such use.

TI has specifically designated certain components which meet ISO/TS16949 requirements, mainly for automotive use. Components which have not been so designated are neither designed nor intended for automotive use; and TI will not be responsible for any failure of such components to meet such requirements.

Products		**Applications**	
Audio	www.ti.com/audio	Automotive and Transportation	www.ti.com/automotive
Amplifiers	amplifier.ti.com	Communications and Telecom	www.ti.com/communications
Data Converters	dataconverter.ti.com	Computers and Peripherals	www.ti.com/computers
DLP® Products	www.dlp.com	Consumer Electronics	www.ti.com/consumer-apps
DSP	dsp.ti.com	Energy and Lighting	www.ti.com/energy
Clocks and Timers	www.ti.com/clocks	Industrial	www.ti.com/industrial
Interface	interface.ti.com	Medical	www.ti.com/medical
Logic	logic.ti.com	Security	www.ti.com/security
Power Mgmt	power.ti.com	Space, Avionics and Defense	www.ti.com/space-avionics-defense
Microcontrollers	microcontroller.ti.com	Video and Imaging	www.ti.com/video
RFID	www.ti-rfid.com		
OMAP Applications Processors	www.ti.com/omap	**TI E2E Community**	e2e.ti.com
Wireless Connectivity	www.ti.com/wirelessconnectivity		

Mailing Address: Texas Instruments, Post Office Box 655303, Dallas, Texas 75265
Copyright © 2012, Texas Instruments Incorporated